DotCombo®

FOR UNSQUARE FINGERS.

Round buttons, color, 10 meters of range for very, very large screens.



Wireless Keyboard & Mouse Combo Set

Package Contents
1 x Keyboard with one Receiver
1 x Mouse
1 x QSG
1 x Warranty

Safety Precautions

To avoid hazards such as fire, personal injury, electric shock, or damage to the equipment, do not immerse any part of this product in water or other liquids; do not spray liquids onto this product, or allow excessive liquid to enter the product. Do not remove the rechargeable battery. If you replace the rechargeable battery, please mind the Positive and Negative. If this product shows sustained damage, do not use it.

Mouse:
Mouse Wireless: 2.4G+BT
Power Supply: Lithium Battery (300mAh)
Method Size: 110.9*62 .4*32.7 mm
Wireless transmission Distance: 10m
Wireless transmission frequency: 2.402~2.480GHZ
Effective Working Distance: 0~8m
Resolution: 800/1200/1600 DPI
Key life: 3,000,000 times
Operating Current: Max. 16mA
Compatibility: Win 11, Chrome OS, iOS

Keyboard:
Keyboard Wireless: 2.4G+BT
Power Supply Method: Lithium Battery (300mAh)
Size: 333.0*130.0*36.0mm
Weight: 525g±10g
Number of Keys: 85PCS
Key life: 10,000,000 times
Wireless transmission Distance: 10m
Wireless transmission frequency: 2.402~2.480GHZ
Operating Current: 6mA
Compatibility: Win 11, Chrome OS, iOS

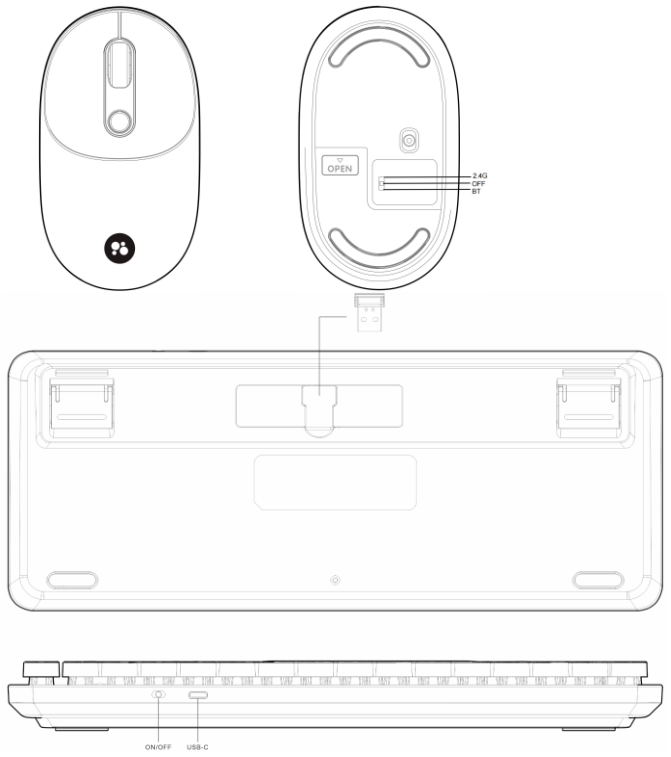

© Copyright 2026 Packard Bell.
www.packardbell.com/support

packard bell.

DotCombo®

FOR UNSQUARE FINGERS.

Round buttons, color, 10 meters of range for very, very large screens.



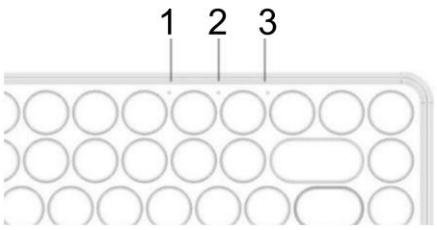

Light Indicators

1. 2.4G Mode
2. BT1 Mode / Caps Lock
3. BT2 Mode / Low Battery

How to connect your keyboard

- Take out the 2.4G receiver from the bottom of the keyboard.
- Press and hold the FN key and the 1 key, do not release.
- Insert the 2.4G receiver into the USB-A port of your computer, then release the keys to start using.
- Press and hold the FN key and the 2 key to switch to BT1 mode
- Press and hold the FN key and the 3 key to switch to BT2 mode

Get to know your mouse:

1. Left button
2. Right button
3. DPI
4. Scroll wheel
5. 2.4G / Off / BT
6. Optical Senseor
7. Rechargeable battery compartment

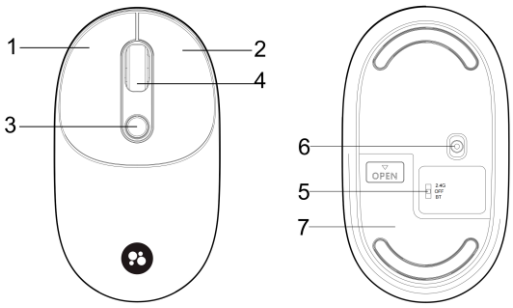

Keyboard Automatic Sleep:

When the keyboard is idle with no operation, it will enter sleep mode automatically after 20 seconds. Press any key to wake it up.

Mandatory Pairing Instructions for Keyboard and Mouse:

Mandatory pairing is required if the 2.4G receiver is lost, replaced with a new one, or the keyboard/mouse does not respond after inserting the 2.4G receiver into the USB-A port. Mandatory pairing may be needed when the mouse is unresponsive.

Mouse Mandatory Pairing Steps:

Switch the mouse to 2.4G mode to start automatic pairing. If failed, then press and hold the right button & the scroll wheel at the same time for 3 seconds. When the mouse indicator lights up, release your hand, and it is ready to use.

© Copyright 2026 Packard Bell.
www.packardbell.com/support

packard bell.